FALCON XL

Rugged All Weather Day/Night Camera

NVTS's new Falcon XL is a compact Day/Night All Environment camera designed for vehicle and remote surveillance operations. The Falcon XL's compact, lightweight design, solves the problem of space without compromising performance.

NVTS incorporates leading edge true total darkness camera technology enclosed in a rugged, fully submersible aluminum housing.

Basic Features:

NVTS's Falcon XL solves the problem of visibility in both day and night using reliable cost effective visible camera technology. Falcon's rugged waterproof aluminum housing makes it ideal for all environment operations.

Applications:

- Short-Range Threat Detection
- Networkable Perimeter Security
- Mobile Surveillance
- Remote Surveillance
- Armored Vehicle/ Driver Vision
- Environmental Monitoring
- Collision and Object Avoidance
- All Weather Key Asset Protection

Platforms:

- Land Vehicles
- Fixed Tower Surveillance
- Unmanned Surface Platforms
- Shipboard Applications

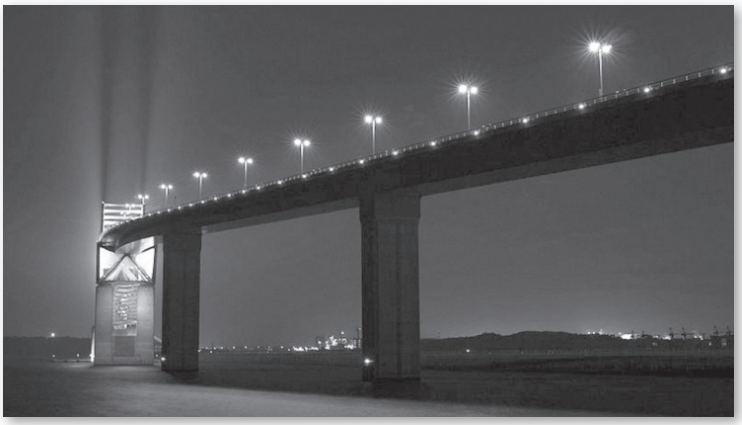

NVTS
patrolling the night™

Falcon XL *Rugged All Weather Day/Night Camera*

Specifications:

Pick-up element	1/2 inch interline transfer CCD image sensor
Num. of total pixels	811(H) × 508(V)
Num. of effective pixels	768(H) × 494(V)
Unit cell size	8.4µm(H) × 9.8µm(V)
Synchronizing system	Internal
Scanning system	2:1 interlace
Video output	Composite Video, 1.0 V(p-p), 75Ω, unbalanced
Resolution (Horiz.)	More than 570TVL (Center)
Minimum illumination	0 lx. (IR LED ON) .00015 Lux (IR Off)
IR LED	Wavelength: 940nm (not visible with human eye)
	Effective distance: Max 30m
S/N	More than 50dB (AGC=5dB, γ=1.0)
AE mode (EI)	1/60 - 1/100000 sec.

AGC	5 - 50dB
Gamma characteristics	γ ≈ 0.35
Power supply	DC+12V±10%
Power consumption	1.92W (160mA)* IR LED OFF
	3.72W (310mA)* IR LED ON (Maximum power)
Operating temperature	-40º to +60º C
Storage temperature	-40º to +60º C
Storage humidity	less than 95%RH
Built-in lens	f=8.0mm, F1.6
Weight	Approx. 1.75kg

* *Design and specifications are subject to change without notice.*

Dimensions below given in mm.

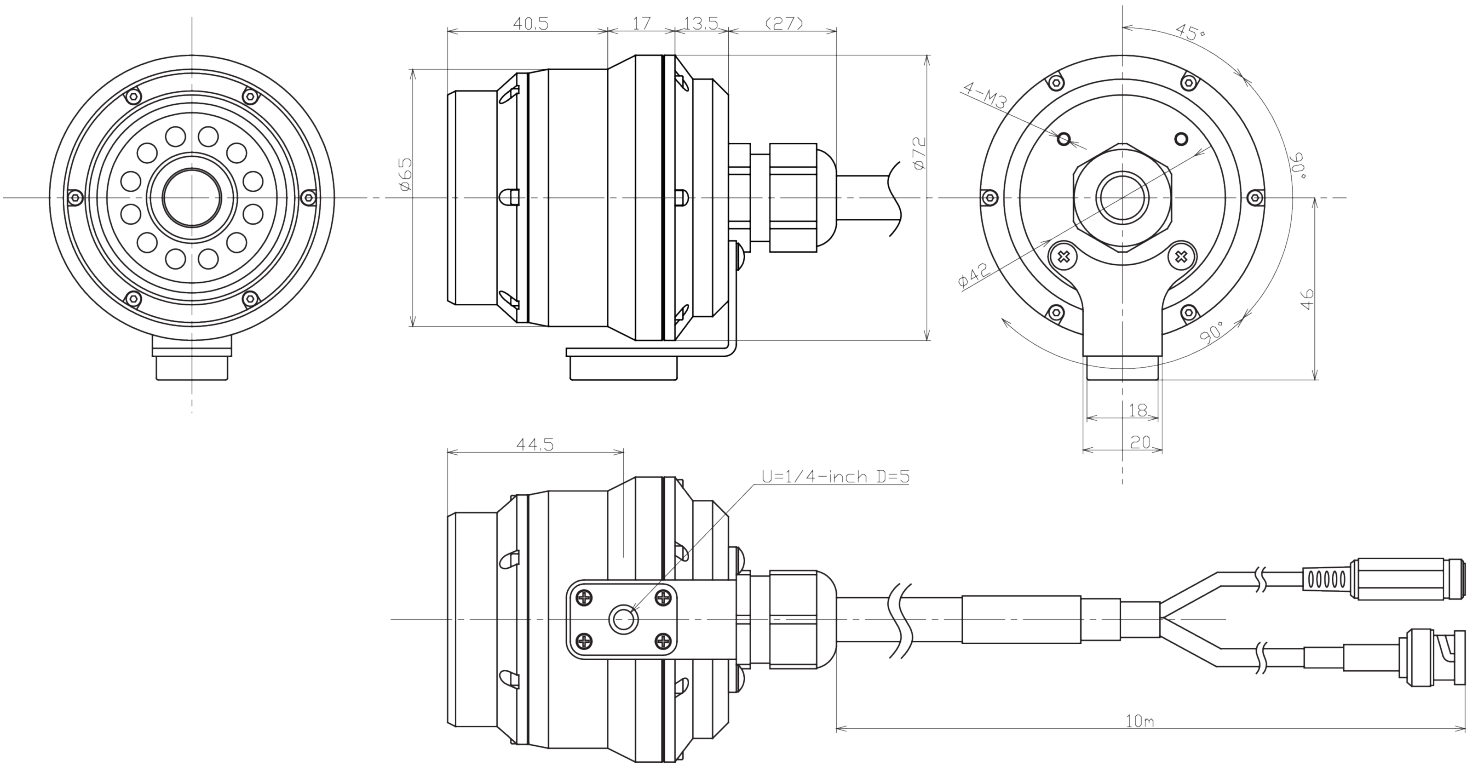

The product describe on this brochure is subject to US export regulations and may require a license prior to export.

Night Vision Technology Solutions, LLC. / P. O. Box 384 / Jamestown, RI 02835 U.S.A.
T. +1- 401-560-0807 / www.nvtsglobal.com

© 2016 NVTS Global. All rights reserved. Features and specifications are subject to change without notice.

NVTS patrolling the night™